1

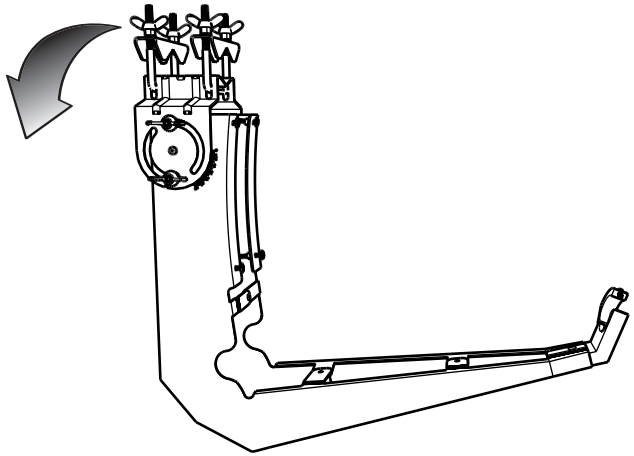

2

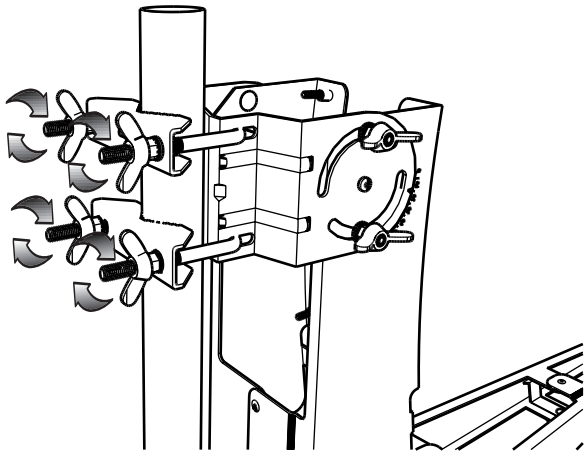

3

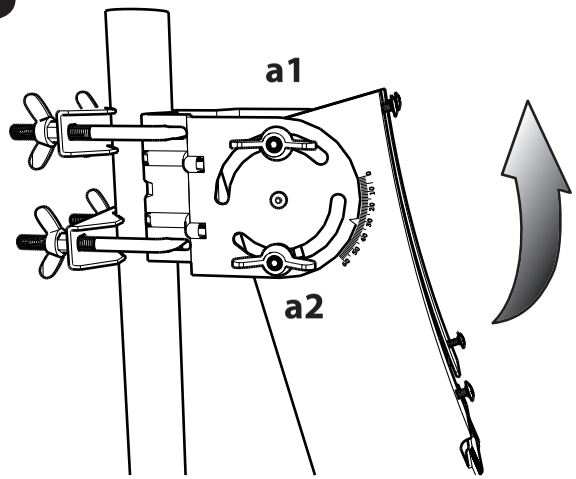

4

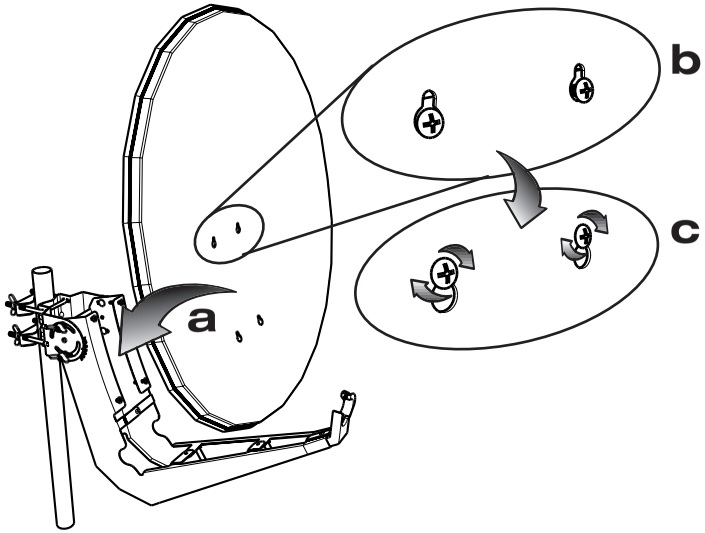

5

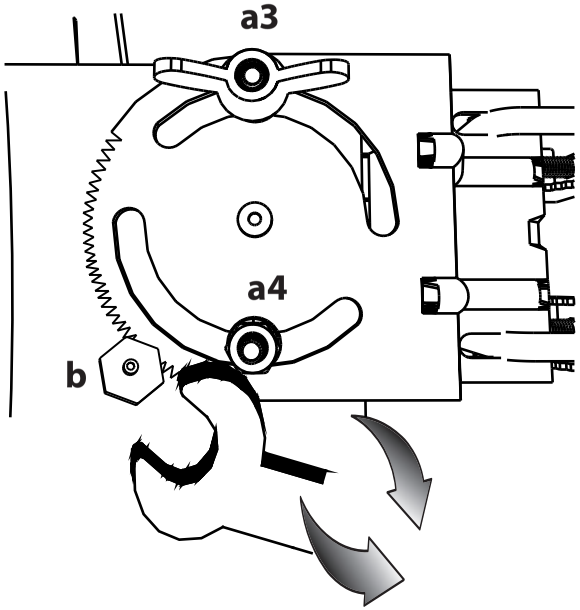

6

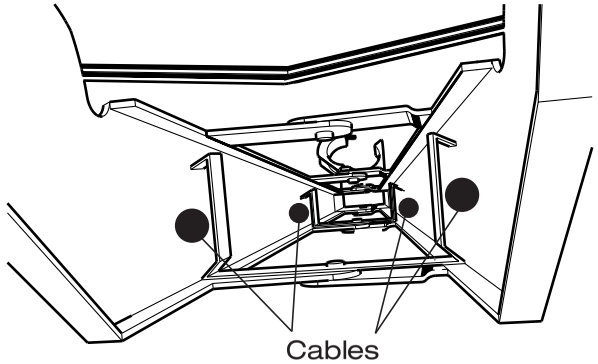

Coppie di serraggio - Torques:
M8 10N/m
M6 4,5N/m

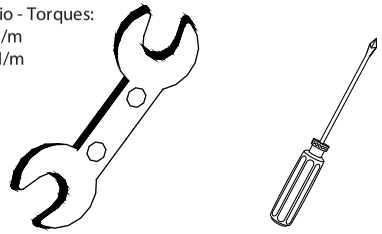

1-Loosen the a1-a2-a4 nuts, keep the a3 nuts at minimum tight just to avoid that the dish will falls down
2-Adjust fine tuning of the elevation by acting on the b nut of fig.5 with 17mm tool.
3-Found the best reception tighten all a nuts.

KF80FDB-KF85FDB 18.07.2018
KF80FDG-KF85FDG 18.07.2018
KF80FDR-KF85FDR 18.07.2018